PLAN - PRIMARY HEALTH CENTER AT VANGOOR

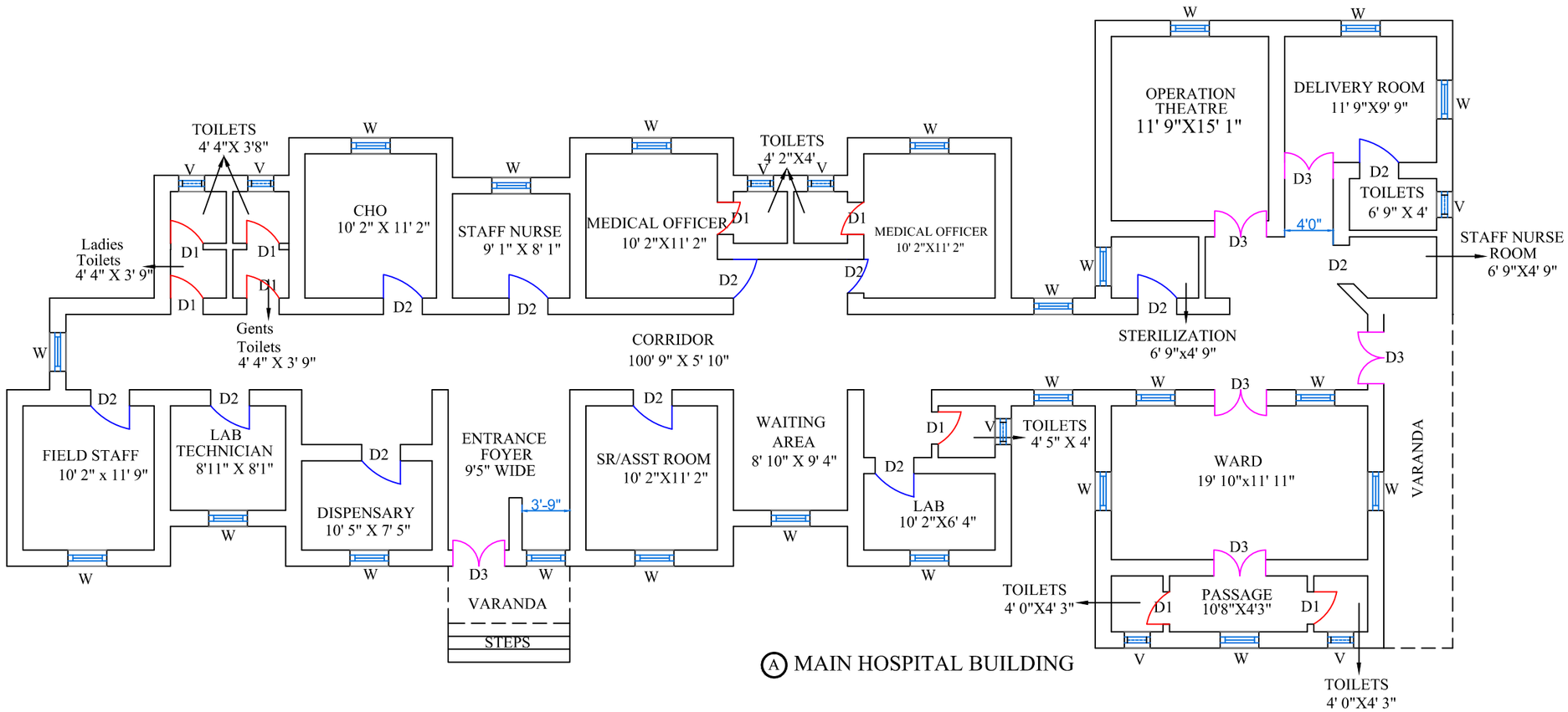

Ⓐ MAIN HOSPITAL BUILDING

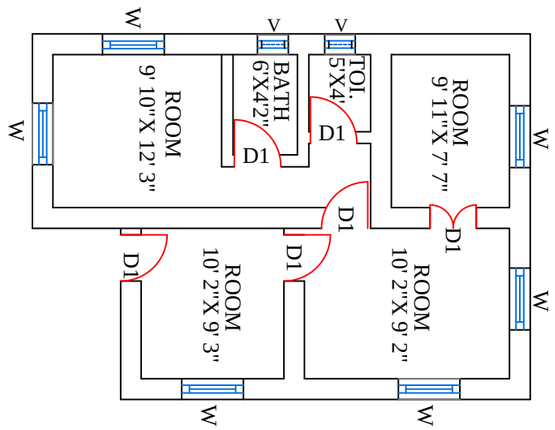

B- STAFF QUARTERS

N

SITE :-

PRIMARY HEALTH CENTER
VANGOOR
MAHABOOBNAGAR DIST.
TELANGANA STATE

AREA DETAILS

Ⓐ :3756.636 Sq.ft
Ⓐ :417.404 Sq.yds
Ⓑ : 662.31 Sq.ft
Ⓑ : 73.59 Sq.yds

REFERENCE

D1..... 2'6"
D2..... 3'
D3..... 4'
WINDOW.....3'
VENTILATOR.....2'

CLIENT

T.S.M.S.I.D.C.
3rd Floor, DM & HS Campus
Sultan Bazar, Koti
Hyderabad, Telangana 500095

SURVEYORS

Rehoboth Surveys
12/10/587/71, Medibavi
Seethaphalmandi, Sec-bad
Secunderabad, Telangana
Contact - 910 094 7338

CONSULTANTS

Anoop Marathe & Associates
8-7-63/1, Rd No. 10, North
R.R Nagar, Old Bowenpally
Secunderabad, Telangana 500011
Contact - 950 244 9911

SURVEY PLAN SHOWING BOUNDARY AND EXISTING DETAILS OF PRIMARY HEALTH CENTER AT VANGOOR

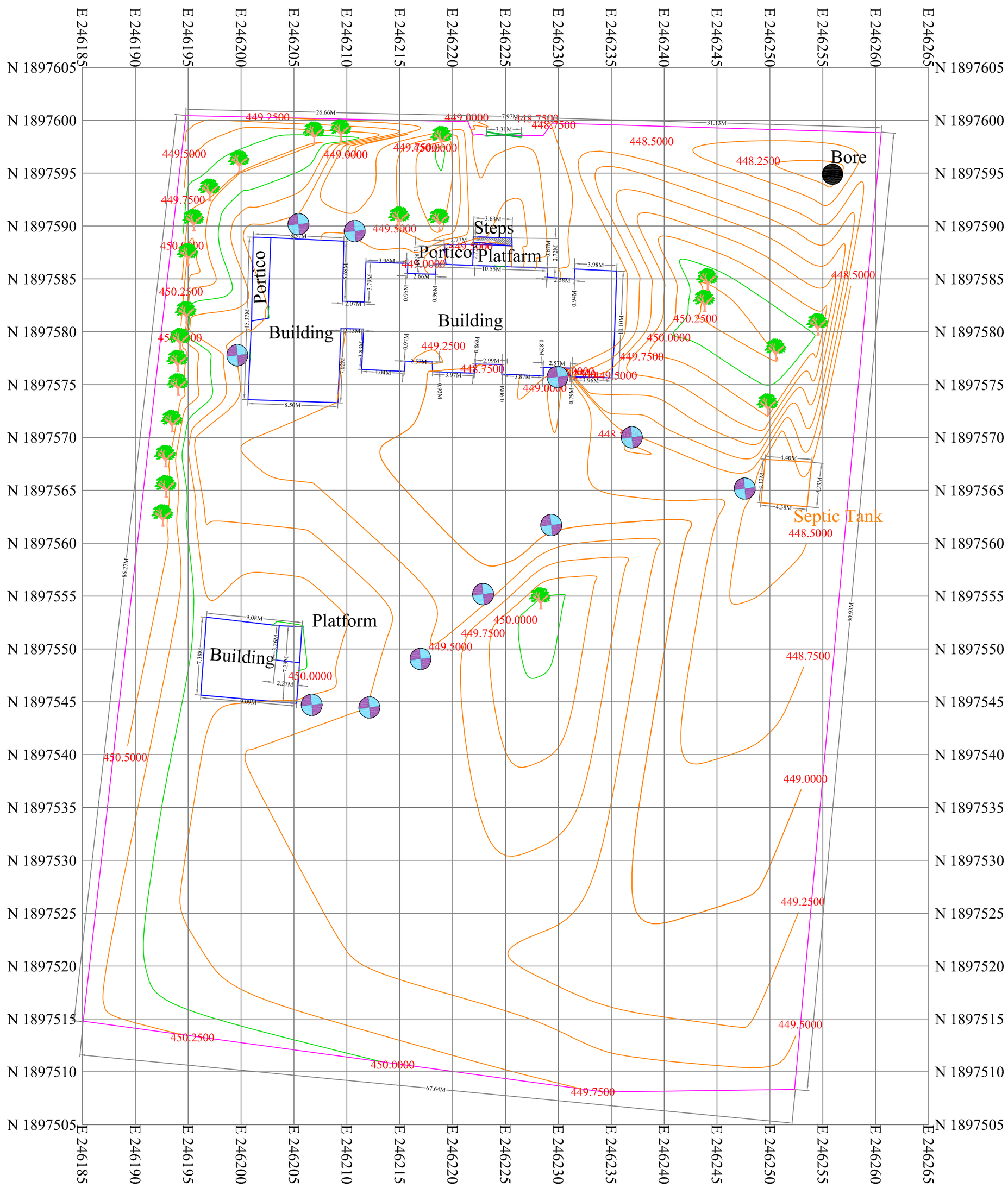

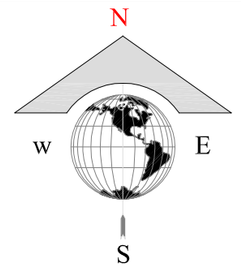

SOF TCOPY SCALE=1:1000

SITE:-

PRIMARY HEALTH CENTER
VANGOOR
MAHABOOBNAGAR DIST.
TELANGANA STATE

AREA DETAILS

5955.433. Sq.mts
1.471 Acres

REFERENCE

BOUNDARY.....
BUILDING.....
GATE.....
MAN HOLE.....
TREE.....
BORE.....

CLIENT

T.S.M.S.I.D.C.
3rd Floor,DM & HS Campus
Sultan Bazar,Koti
Hyderabad,Telangana 500095

SURVEYORS

Rehoboth Surveys
12/10/587/71,Medibavi
Seethaphalmandi,Sec-bad
Secunderabad,Telangana
Contact-9100947338

CONSULTANTS

Anoop Marathe& Associates
8-7-63/1,Rd No.10,North
R.R agar,Old Bowenpally
Secunderabad,Telangana500011
Contact-9502449911