REPORT

SURVEYING & ASSET MAPPING (HOSPITALS & MEDICAL COLLEGES)

PRIMARY HEALTH CENTER
ADDAKAL

CLIENT

TELANGANA STATE
MEDICAL SERVICES & INFRASTRUCTURE
DEVELOPMENT CORPORATION
KOTI, HYDERABAD

CONSULTANT

ANOOP MARATHE & ASSOCIATES
8-7-63/1, ROAD NO. 10, NORTH
RAJA RAJESHWARI NAGAR
OLD BOWENPALLY, SEC-BAD 500011

REPORT
SURVEY & ASSET MAPPING (HOSPITALS & MEDICAL COLLEGES)

HOSPITAL PRIMARY HEALTH CENTER
LOCATION ADDAKAL

Survey & Asset Details

Area of Land -	1747.968	Sq. Meters
	0.431	Acres

Number of Buildings in Premises	3	No's

Details of Existing Buildings

Main Hospital Building

Type	Load Bearing Structure	
	R.C.C Slab/Roof	
Area	253.31	Sq. Meters
No. of Floors	Ground Only	

Ayush Building

Type	Load Bearing Structure	
	R.C.C Slab/Roof	
Area	52.47	Sq. Meters
No. of Floors	Ground Only	

Staff Nurse Quaters

Type	Load Bearing Structure	
	R.C.C Slab/Roof	
Area	56.01	Sq. Meters
No. of Floors	Ground Only	

SURVEY PLAN SHOWING BOUNDARY AND EXISTING DETAILS OF PRIMARY HEALTH CENTER AT ADDAKAL

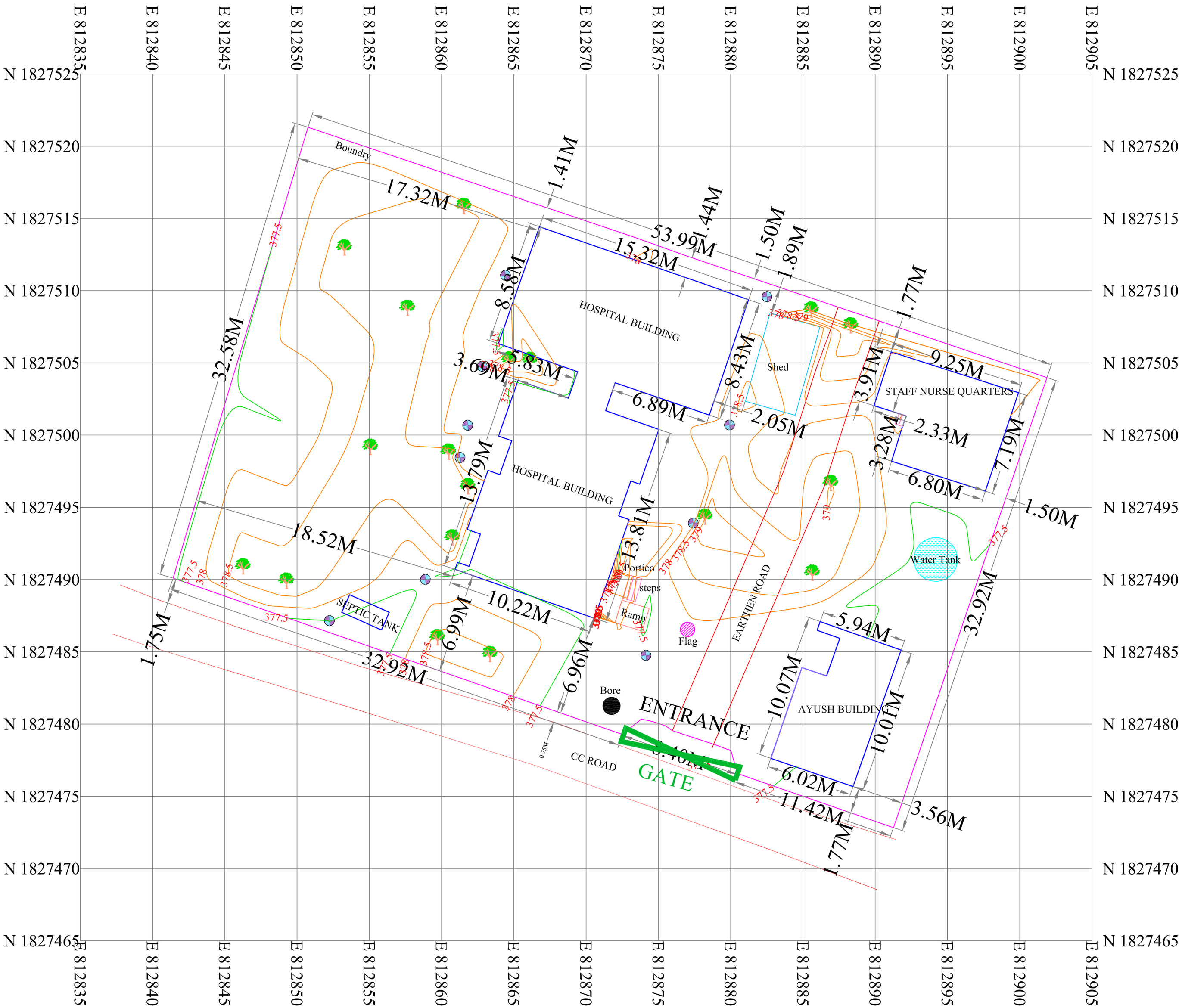

N
W E
S

SOFT COPY SCALE = 1:1000

SITE :-

PRIMARY HEALTH CENTER
ADDAKAL
MAHABOOBNAGAR DIST.
TELANGANA SATE

AREA DETAILS

1747.968 Sq.mts
0.431 Acres

REFERENCE

BOUNDARY.....
BUILDING.....
ROAD.....
BORE.....
GATE.....
MANHOLE.....
SUMP.....
DRAIN.....
ELECTRICAL POLE..
TREE.....

CLIENT

T.S.M.S.I.D.C.
3rd Floor, DM & HS Campus
Sultan Bazar, Koti
Hyderabad, Telangana 500095

SURVEYORS

Rehoboth Surveys
12/10/587/71, Medibavi
Seethaphalmandi, Sec-bad
Secunderabad, Telangana
Contact - 910 094 7338

CONSULTANTS

Anoop Marathe & Associates
8-7-63/1, Rd No. 10, North
R.R Nagar, Old Bowenpally
Secunderabad, Telangana 500011
Contact - 950 244 9911

PLAN SHOWING OF PRIMARY HEALTH CENTER AT ADDKULA

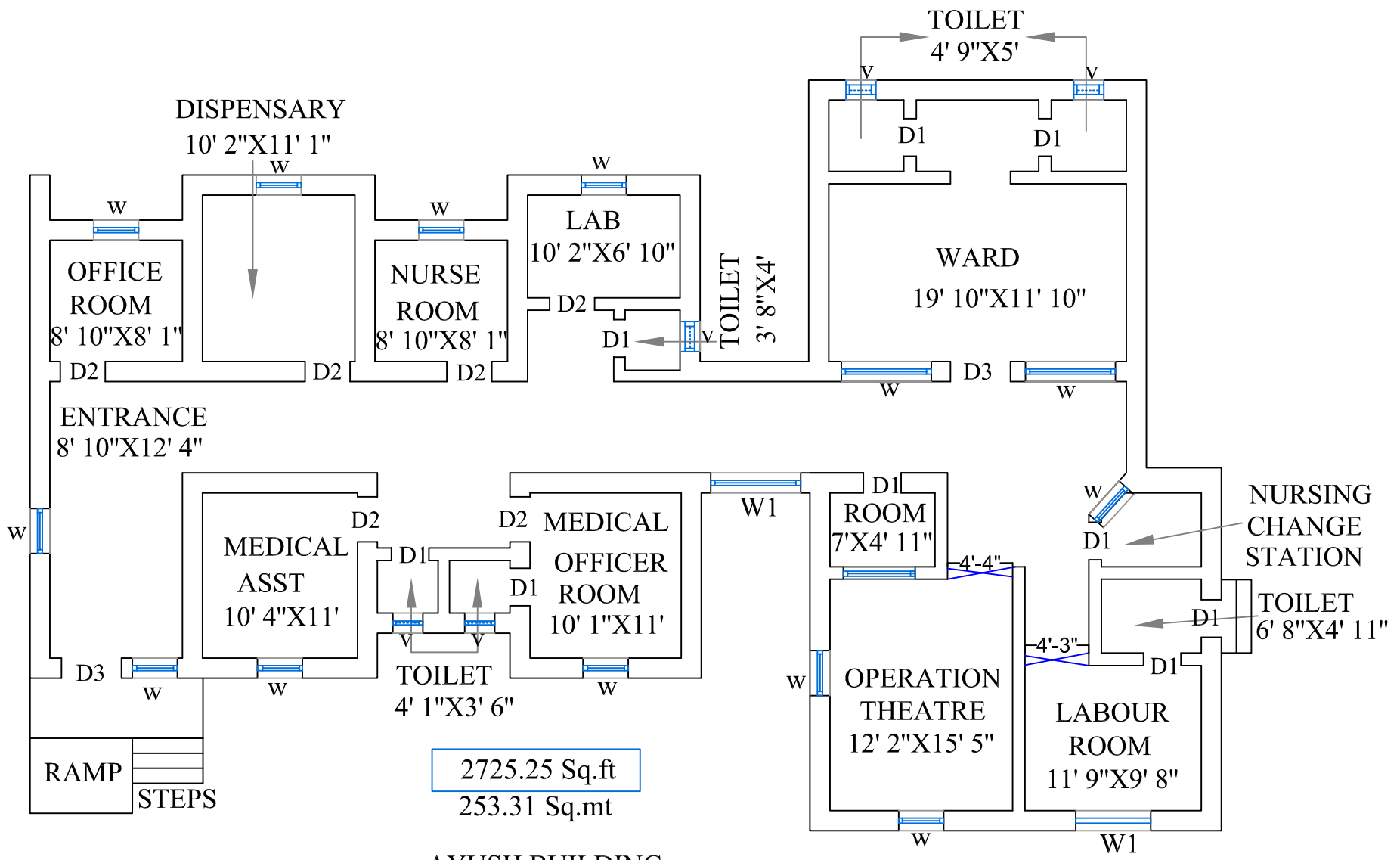

2725.25 Sq.ft
253.31 Sq.mt

AYUSH BUILDING

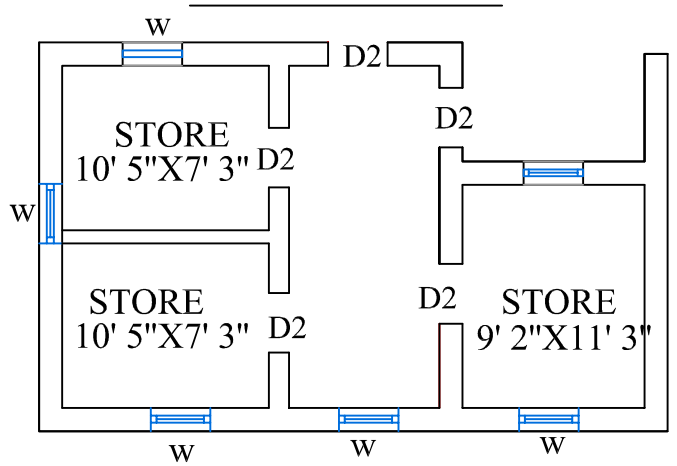

564.45 Sq.ft
52.47 Sq.mt

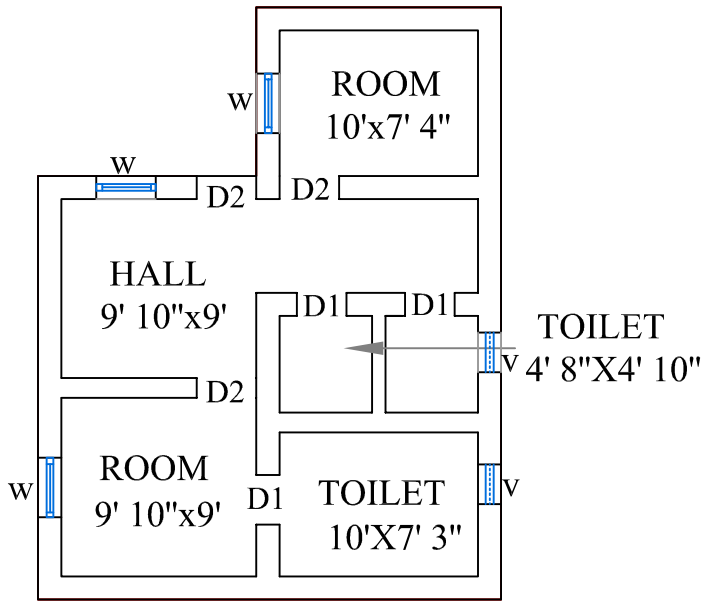

STAFF NURSE QUARTERS

602.61 Sq.ft
56.01 Sq.mt

DRAWING 1 OF 1

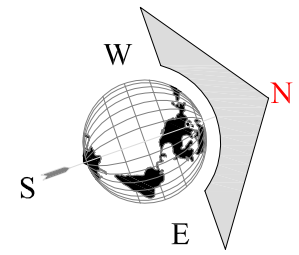

SITE :

PRIMARY HEALTH CENTER
ADDKULA
MAHABOOBNAGAR
TELANGANA STATE

AREA DETAILS

Total - 3892.31 Sq.ft
Total - 361.79 Sq.mt

DOOR DETAILS

D1.....	2'6"
D2.....	3'
D3.....	4'
W1.....	6'
W.....	3'
V.....	2'

CLIENT

T.S.M.S.I.D.C.
3rd Floor, DM & HS Campus
Sultan Bazar, Koti
Hyderabad, Telangana 500095

SURVEYORS

Rehoboth Surveys
12/10/587/71, Medibavi
Seethaphalmandi, Sec bad
Secunderabad, Telangana
Contact 910 094 7338

CONSULTANTS

Anoop Marathe & Associates
8 7 63/1, Rd No. 10, North
R.R Nagar, Old Bowenpally
Secunderabad, Telangana 500011
Contact 950 244 9911

ప్రాథమిక ఆరోగ్య కేంద్రము
PRIMARY HEALTH CENTRE

AMBULANCE